Rev	Modification	Date	Validate

ROHS

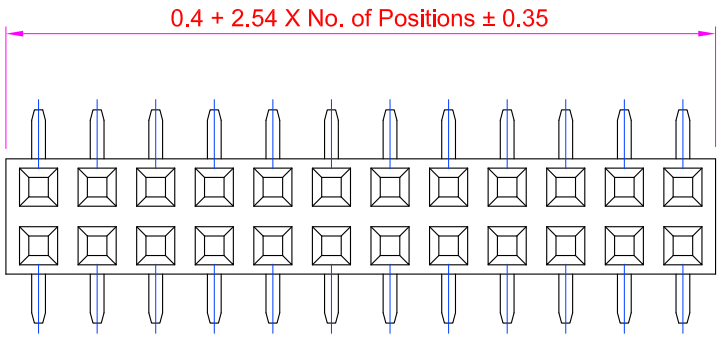

Recommended
P.C. Board SMD Layout

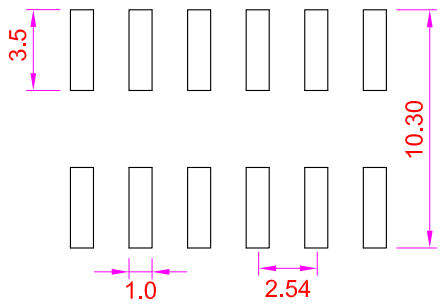

Specifications

Current Rating : 3 Amps
Insulator Resistance : 1000 Megohms min.
Contact Resistance : 20 m ohms max.
Dielectric Withstanding : AC 600V
Operating Temperature : -40°C ~ +105°C
Contact Material : Brass
Insulator Material : Polyester, UL 94V-0 NY6T
Contact Plated : See Option
Standard:Full Gold Flash

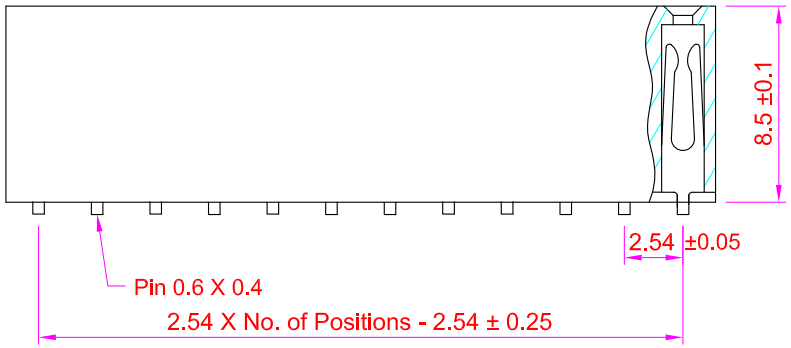

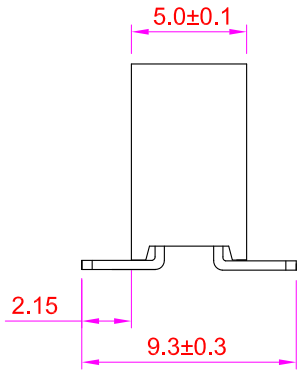

Order Information

FHA3 - M 2 XX - 0 0 XX -X X

Serial Type
Terminal Type
M : SMD TYPE
Row Type
2 : Dual Row
No. Of Pin Per Row
Contact Plated
Cap Option
B : No Cap
Packing Method
T : In Tube

Contact Plating Option	Full Gold Plating	Gold Plating On Contact Area Tin Plating On Solder Area	Full Tin Plating
	GA : Gold Flash GC : Gold 10u" GD : Gold 15u" GE : Gold 30u"	SA : Gold Flash SC : Gold 10u" SD : Gold 15u" SE : Gold 30u"	TA : Tin 100u"

GENERIAL TOLERANCE		單 位 (UNIT)	料 號 (PART NO.)		圖號 (DWG NO.)		玹允企業有限公司 IO PARTS Enterprise Co.,Ltd.
X . ± 0.50	X . ° ± 5 °	mm	FHA3-M2XX-00XX-XX		FHA3-M2XX		
. X ± 0.20	. X ° ± 2 °	審核 (APPROVAL)	核對 (CHECKED)	製圖 (DRAWN)	比 例 SCALE 3:1	張 數 SHEET 1/1	名稱 (TITLE): Female Header P2.54 X 2.54mm
. X X ± 0.10	. X X ° ± 1 °	Alice	Mary	Fen-Fen	角法 PROJ.	更改 REV. A	Profile : 8.5mm, Dual Row,SMD Type
DATE:2017/06/27	SCM1						